RLM 419P

Laminators

Instructions for Use

1. Set-up

The laminator should be installed on a table where you have access to the front and rear side of the unit. Special care must be taken to avoid any UV light emission to the laminate. Even white light from normal room illumination will expose the laminate. We recommend that you install yellow safelight tubes or at least dim the room illumination during use and cover the laminator after it has cooled down. A good ventilation of the room, or even a separate air exhaust close to the laminator are recommended.

Unpack the unit from its box and set it on the table. Unpack all the accessories as well. If you received the unit in a wooden box there should be two round knobs coming with it that need to be mounted: One goes on a shaft at the outer right side of the housing, the second one goes to the lower right front of the unit.

Do not yet mount the inlet roller table.

Remove the coil holders from the unit. To do so, first remove the take-up rollers that are sitting on top of them and put them aside. Pull the right end of the hexagon rod back to the left and lift it out of the holder. Use a 2.5 mm hex screw key to remove the right flange from each of the two rods. Shift the left flanges on both rods so that they have exactly the same distance from the left end of the rod.

Connect the unit to your 230 V 50 Hz main supply and check that the main switch is off.

2. Control elements

The laminator has control switches on the upper left and right side of the housing. To the right you see the main supply switch, the drive switch RUN and the speed adjustment potentiometer. To the left there is the digital temperature control and the HEATER switch. The transport and heater switches are illuminated when turned on.

The thermostat has two displays and four buttons. The upper display shows the actual temperature, the lower one shows the set value. Press the mode button once and use the up and down arrow keys to set the desired temperature. Finally press the mode button again. The out/off button serves to turn the heaters off, but is not used in normal operation. Use the HEATER switch instead. The OUT LED right to the upper display shows if the heaters are actually on or off.

Bungard Elektronik · Rilke Str. 1 · D-51570 Windeck
Tel 02292 5036 · Fax 6175 · info@bungard.de

RLM 419P

Laminators

Instructions for Use

The thermostat has a soft heat-up function that prevents over-temperature on the lamination rollers. After each initial start the lower display will show increasing temperature values until the set value is reached.

Temperature setting proposals are about 105 °C for photoresist and 115 °C for solder mask. You must determine the best setting for your application. If the temperature is too low the resist will not stick to the copper, if it is too hot the material develops vapours that could irritate your nose and throat, and the resist could loose its sensitivity to light or could be otherwise damaged.

The speed setting depends on the temperature conductivity of the material you want to laminate. As a starting value for your own test we recommend a setting of 0.5 on the potentiometer scale. A too fast or too low speed can show the same faults like a too low or a too high temperature setting.

The knob at the right side of the laminator serves for turning the lamination rollers by hand. This is necessary because one important principal of construction of the RLM laminators is that the transport rollers are separate from the lamination rollers. So the knob serves mainly for feeding the laminate until the transport rollers can grab it. You will need this knob only once each time you mount a new coil.

The knob on the lower right front is used to adjust the lamination pressure. This is important as the RLM laminators can be used for solder mask application as well. A scale to read out the setting can be found on the outer right side of the unit, beneath the hand knob. In order to well press the mask into the profile between the copper traces, we recommend a setting of 4 to 5. Photoresist application is done at a setting of 1 to 2.

3. Mounting the laminate coils.

The following procedure is the same for photoresist and for solder mask laminate, but we assume you use only one of both types at a time on both the upper and lower coil.

Unpack the laminate rolls from their safelight boxes and mount them on the left flanges of the coil holders. See the threading diagram in appendix 1 of this manual in order to have the right sense of coil rotation. Mount the right flanges and push them onto the coil as far as possible. The coils must not slip on the flanges. Mount the coil holders back to the laminator and put the take-up rollers in place.

The laminate consists of three layers. These are the outer, strong and transparent polyester cover foil, the soft and sticky laminate layer itself and a thin, soft and mat plastic foil on the ''inner'' side of the compound. This thin foil prevents that the laminate sticks to itself when it is on the coil, but must be remo-

Bungard Elektronik · Rilke Str. 1 · D-51570 Windeck
Tel 02292 5036 · Fax 6175 · info@bungard.de

RLM 419P

Laminators

Instructions for Use

ved before the laminate goes on the board. This separation foil will wind up on the take-up rollers.

Pull the laminate off the lower coil for about 30 cm. Apply a piece of adhesive tape to the upper and lower end of the laminate compound and pull these ‘‘handles’’ to separate the thin and soft intermediate foil from the laminate. Stick it to the take-up roller by adhesive tape and put the take-up roller on top of the laminate coil. Repeat this procedure for the upper coil, with reference to the threading diagram. Make sure the take-up rollers are driven automatically by the rotation of the laminate coil.

For the following step you will profit from two pieces of cardboard of approx. 300 x 300 size and 1 to 2 mm thickness.

Turn the laminator main supply on. Turn the heater and drive switch off. Wrap about 10 cm of the laminate from the lower coil around the edge of one piece of cardboard. Insert this edge of the cardboard into the gap between the two red laminator rollers. Turn the knob on the right side of the laminator so that the cardboard with the laminate will go into the unit. Continue turning the knob until you feel a resistance. This is where the cardboard has to go between the transport rollers that you can see from the rear of the unit. Adjust the speed to 2 on the scale, turn on the drive switch and keep pressure on the right knob until the cardboard is taken by the transport rollers. Stop the drive before the cardboard leaves the lamination rollers.

Wrap about 10 cm of the upper laminate around the edge of the second cardboard and push this forward onto the end of the first one. Turn on the drive, feed the second cardboard between the lamination rollers and leave the transport on until the first cardboard comes out of the unit and the second one is still between the lamination rollers. Access the back side of the laminator. With a sharp knife cut the laminate between the two cardboards. Remove the first cardboard, peel the laminate off and keep the cardboard for further use.

Attention: Never use a knife blade close to the lamination rollers. Every smallest cut will destroy the roller.

Check that the upper and lower laminate superimpose exactly. If necessary, subsequently loosen the left and right flange of the upper coil and shift them left or right until both laminate layers match. If the laminate is plied during this adjustment just have the first cardboard go through the unit again, so that the laminate can self-adjust.

Finally, mount the inlet roller table: Lift it at its rear, insert the front end (with the brush) in the middle of the unit until it goes into the two lateral pins on the housing, and lower the rear end until

Bungard Elektronik · Rilke Str. 1 · D-51570 Windeck
Tel 02292 5036 · Fax 6175 · info@bungard.de

RLM 419P

Laminators

Instructions for Use

this snaps onto the pins as well. Adjust the lateral guide bar of the inlet table so that the left PCB edge matches the left edge of the laminate film.

It is assumed that at the end of each job you leave a piece of cardboard between the lamination rollers. This serves to keep the lamination rollers clean from molten laminate.

4. Operation

See section 2 for a description of the control elements. Turn the heaters on. Set the desired temperature and wait until the unit has heated up.. Set the pressure and speed and start the transport. Let the cardboard leave the lamination rollers. Insert a PC board through the brushes of the inlet table and push it slightly until it is taken by the lamination rollers. If you do several PCBs at a time feed them one after the other with about 2 cm distance between them.

From the rear of the unit, cut the PCBs off one after the other using a sharp knife blade. Let the boards cool down before exposure.

The last sheet that you insert should always be the cardboard, with its end still between the lamination rollers. Turn the laminator off and let it cool down. If you have yellow safelight in the room you may leave the unit open. Otherwise you should cover the laminate coils from daylight.

Attention: Never cover a hot laminator!

5. Service and maintenance

The laminator is maintenance free. It only needs cleaning, especially if there was laminate touching the lamination rollers. Use warm soapy water and a sponge to remove laminate rests from the roller surface. Never use hard or sharp tools. They could damage the heater wires that are inside the silicone rubber.

There are no user serviceable parts inside the left and right blue coloured side compartments. On the rear, beneath the board outlet, there is a white plate. Behind this plate there is the motor drive circuit with a fuse. If ever the transport rollers do not work although speed is set and the RUN switch is on, you might have to check this fuse. Replace it only by one of the same rating and characteristics.

Bungard Elektronik · Rilke Str. 1 · D-51570 Windeck
Tel 02292 5036 · Fax 6175 · info@bungard.de

RLM 419P

Threading Diagram

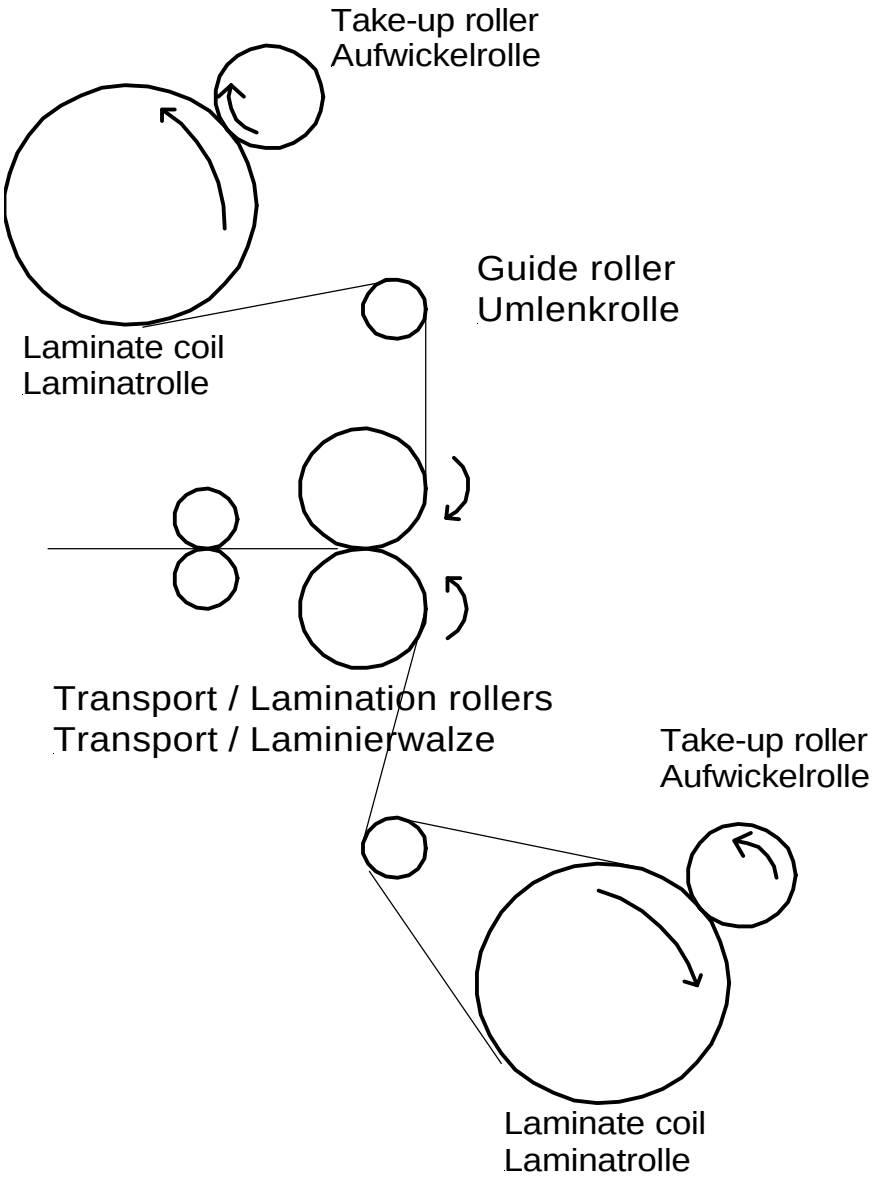

Bungard Elektronik · Rilke Str. 1 · D-51570 Windeck
Tel 02292 5036 · Fax 6175 · info@bungard.de

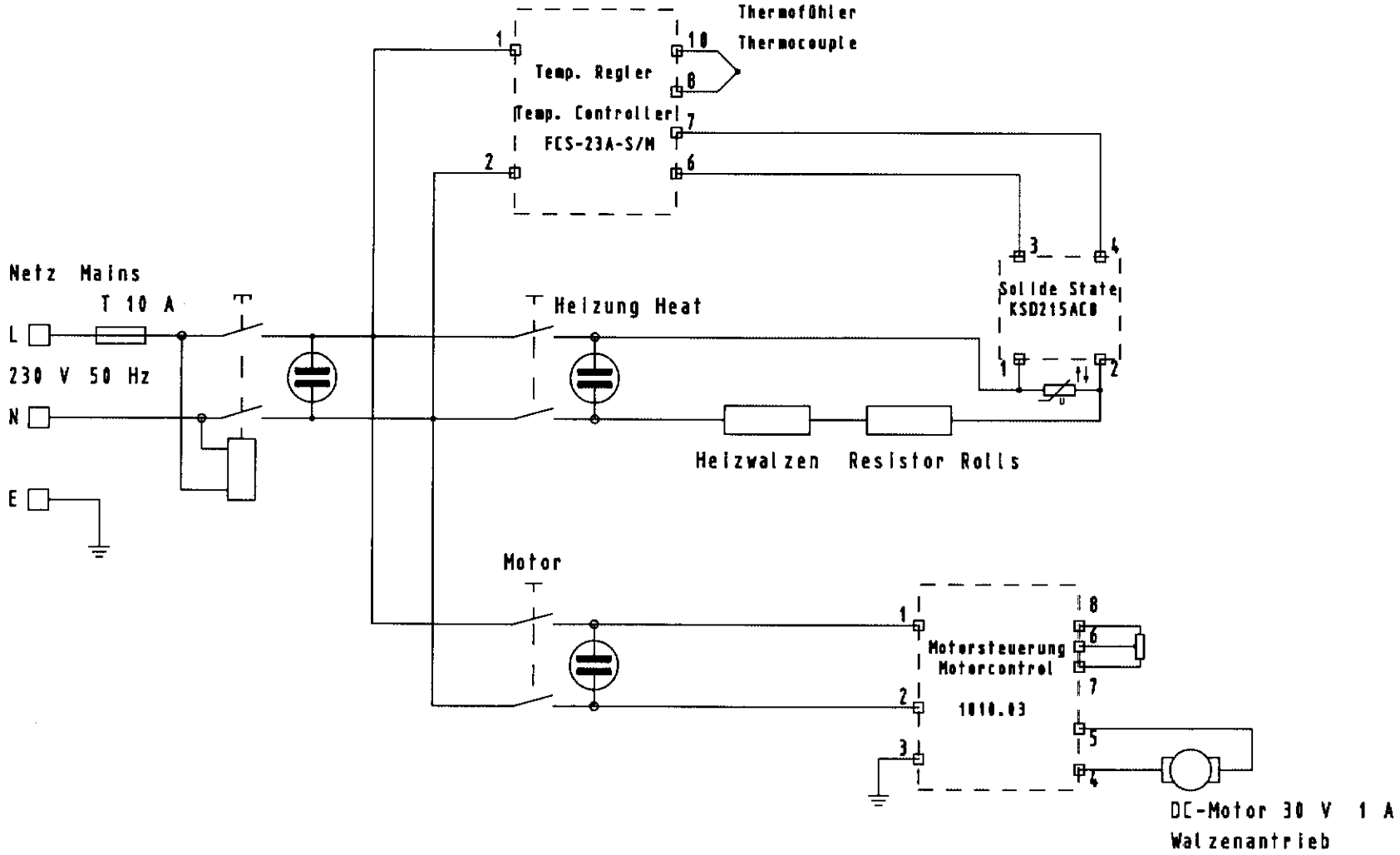

Laminator RLM 419	Gez.: 26.10.99
-	Gepr.:

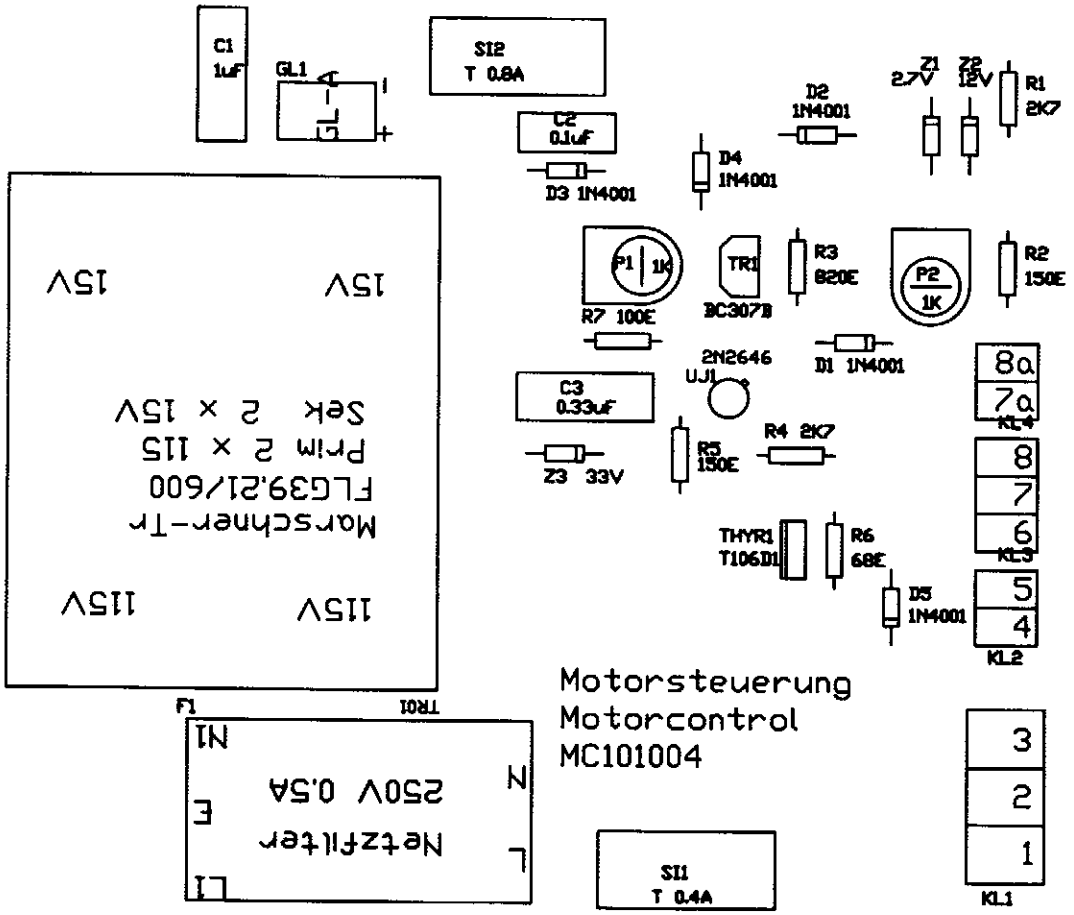

P 1 = max. Geschwindigkeit / max. speed

P 2 = min. Geschwindigkeit / min. speed

Laminator RLM 419	Messst.	Gez.	
Motorsteuerung/Motorcontrol		Gepr.	
		Ges.	

EG-Konformitätserklärung
Declaration of conformity
Déclaration de conformitée

Wir (Name des Anbieters) We (Suppliers Name) Nous (Nom du Fournisseur)	Bungard Elektronik
Anschrift Address Adresse	Rilke Straße 1 D-51570 Windeck

erklären in alleiniger Verantwortung, daß die Produkte
declare under sole responsibility, that the products
déclarons sous notre seule responsibilitée, que les produits

Bezeichnung / Typ Name / type Nom / type	Entwicklergerät HA 205 Belichtungsgerät HELLAS Ätzmaschinen JET 34d, DL500 Ätzmaschine Splash, Splash Center Laminator RLM 419p, RLM 426p Rollverzinner RT 12R Bürstmaschine RBM 300, 400, 402 Tauchbeschichter RDC 10, 12 Bohr- und Fräsmaschine BUNGARD CCD Durchkontaktierungsanlage COMPACTA Abwasserreinigungsanlage IONEX
mit den Anforderungen der Normen fullfil the requirements of the standards satisfaitent aus exigences des normes	EN 50 081-1, EN 50082-1 EN 55014, EN 55015 EN 60204 Teil / Part 1
und den wesentl. Schutzzielen der and the basic requirements of et des exigences de base de la	Richtl. / Directive 89/392 Anh. / App. I

übereinstimmen und damit den Bestimmungen der folgenden EG-Richtlinien entsprechen:
and therefore correspond to the regulations of the folowing EU-Directives:
et, ainsi, correspondent aux règlements des Directives du Conseil:

89/336/EWG, 89/392/EWG, 73/23/EWG

D. Bungard

Windeck, 01.04.96	Dietmar Bungard
Ort und Datum der Ausstellung Place and Date of Issue Lieu et date d´établissement	Name und Unterschrift des Befugten Name and signature of authorized person Nom et signature de la personne autorisée

Diese Erklärung entspricht EN 45 014
This declaration corresponds to EN 45 014
Cette déclaration correspond à EN 45 014